National Aeronautics and Space Administration

Educational Brief	
Educators & Students	Grades 9-12

EB-2002-07-xxx-MSFC

Educational Brief

NASA's Bioreactor: Growing Cells in a Microgravity Environment

Introduction to Microgravity

Zero **gravity**. **Microgravity**. They're the same thing, aren't they? Many people use the words interchangeably, but there is a difference, and to astronauts and scientists, the difference is significant. The prefix "micro" means very small (as in microscopic) and comes from the Latin word meaning "one-millionth. " A familiar example of microgravity is the moon, where gravity is one-sixth of that on Earth. The term microgravity is used to describe a condition where gravity is not small, but *appears* to be small. This occurs on an orbiting spacecraft, such as the **International Space Station** (ISS), and all objects in **free-fall**.

If you watch a Space Shuttle launch, you'll notice that the vehicle doesn't travel in a completely vertical direction. It accelerates in an arching path out over the ocean until it reaches an orbital speed of nearly 27,350 kilometers (17,500 miles) per hour. At this speed, the Shuttle effectively falls around the Earth, in what is called an orbit. A closer look at orbits and free-fall can help us understand how we can simulate microgravity like you will do with the student **bioreactor**.

Orbits

An orbit is a regular, repeating path that one object takes around another. Almost every object in space orbits around something. The planets orbit the Sun; our Moon and the moons of other planets orbit their planets; comets orbit the Sun. Most asteroids in our solar system orbit the Sun in a band between Mars and Jupiter. Even the Sun is orbiting around the center of its galaxy. Many human-made spacecraft orbit Earth. The International Space Station (ISS) is in orbit around the Earth.

When viewing a Space Shuttle launch, you may have noticed the enormous force used to accelerate the Space Shuttle in an arching path. The Shuttle must accelerate until it reaches escape velocity. Escape velocity (http:www.nasaexplores.com/lessons/01-049) is the speed a body must attain in orbit to break free of the gravitational hold of the larger body. Escape velocity depends on the mass of the larger body and the distance of the smaller body from the larger body's center. The escape velocity from the Earth is about 11.3 kilometers (7 miles) per second. At an altitude of 242 kilometers (150 miles), orbital velocity is maintained at approximately 17,000 miles per hour.

You can view a Shuttle launch at http://mediaarchive.ksc.nasa.gov.serach.cfml

Activity One: Complete the gravitational pull activity at: http://www.nasaexplores.com/lessons/01-002/9-12_2.pdf

Working Draft

An orbit is the result of a precise balance between the forward motion of an object in space (such as a planet or moon) and the pull of gravity from the body it orbits. An object in motion will stay in motion, in other words, a net force must act on it to change its inertia, or an object at rest will remain at rest unless something pushes or pulls on it. This is Sir Issac Newton's First Law of Motion. Without gravity, an Earth-orbiting satellite would go off into space along a straight line. With gravity, it is pulled back toward the Earth. There is a continuous tug-of-war between the object's tendency to move in a straight line and the tug of gravity pulling it back. An object's momentum and the force of gravity have to be perfectly balanced. If the forward movement (momentum) of one object is too great, the object will speed past the other one and not enter into orbit. If momentum is too small, the object will be pulled into the other one. You can think of it as the object constantly falling into the planet, but because it's moving sideways fast enough, it never hits. This means it has achieved orbital velocity. Orbital velocity is the speed needed to maintain balance between gravity's pull on the satellite and the momentum of the satellite's motion. Since gravity is the only force acting on the satellite it is said to be in free-fall.

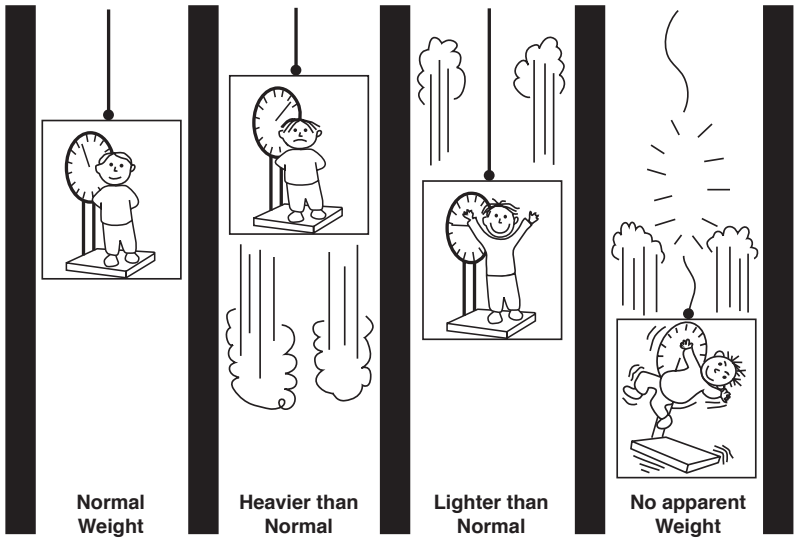

Acceleration and weight elevator diagram.

Free-Fall

Free-fall occurs in a gravitational field where the **acceleration** is the same as that due to gravity alone. Said another way, an object that is moving because of the action of gravity alone is said to be free-falling. Have you ever ridden down 15 floors in an elevator, and your stomach "jumped?" You felt almost like you were floating. Many amusement park rides create brief periods of free-fall. Some rides that operate vertically without any applied forces are actually classified as "free-fall rides." Most roller coasters have a set of parabolic (rolling) hills that also create brief periods of apparent **weightlessness**. For less adventurous people, a car ride on the rolling hills of a country road or jumping on a trampoline also create brief experiences of weightlessness. So, you may have experienced free-fall sensation yourself and not realized it.

Let's consider why riding down an elevator makes you feel like you are floating. Imagine that the elevator is on the top floor and suddenly the cable breaks. The car and you fall to the ground. Gravity is the only force acting on this system, if we neglect air resistance. Thus, the elevator and you are in free-fall. You and the car are accelerating at the same rate. Whenever you accelerate in one direction, in this case down, you will feel a gravity-like sensation pulling you in the opposite direction. That feeling is sometimes referred to as a fictitious force. Indeed, it is not a force at all. The feeling of acceleration is really just your inertia acting to impede your acceleration.

Activity Two: Free Fall Demonstrator
http://science.msfc.nasa.gov/msl1/ground_lab/exp2.htm

Working Draft

Activity Three: Conduct NASA's "Falling Water" activity at: http://vesuvius.jsc.nasa.gov/er/seh/fallingwater.pdf

Remember the discussion on orbits? We said that a satellite experiences a continuous tug-of-war between the object's tendency to move in a straight line and the tug of gravity pulling it back. The tendency to move in a straight line is inertia. Stresses are felt inside your body as its parts push on one another to allow them to accelerate at the same rate. Your interpretation of those stresses is a weight-like feeling in the direction opposite your acceleration. Since there is a force down, gravity, and an apparent opposing fictitious force, they balance one another, resulting in a net force of zero.

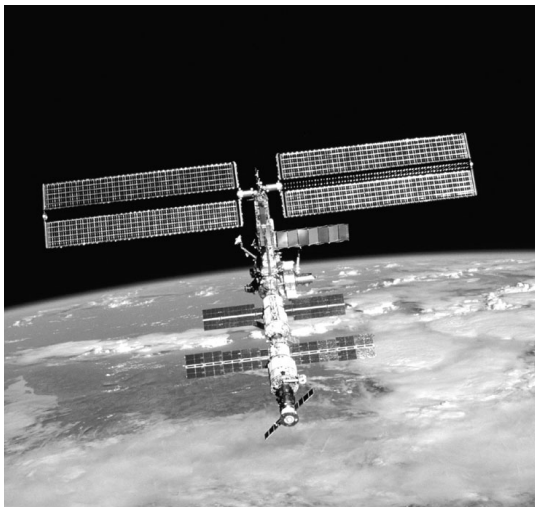

The International Space Station orbiting the Earth.

Understanding Microgravity

Many people mistakenly think that there is no gravity above the Earth's atmosphere, and this is why there appears to be no gravity aboard orbiting spacecraft. Typical orbital altitudes for human space flight vary between 120 miles - 360 miles (192 km to 576 km) above the surface of the Earth. The gravitational field is still quite strong in these regions, since this is only about 1.8% the distance to the Moon. The Earth's gravitational field at about 250 miles (400 km) above the surface maintains 88.8% of its strength at the surface. Therefore, orbiting spacecraft, like the Space Shuttle or Space Station, are kept in orbit around the Earth by gravity. Gravity is the attraction between any two masses, most apparent when one mass is very large (like the Earth). The acceleration of an object toward the ground caused by gravity alone, near the surface of the Earth, is called normal gravity, or 1g. This acceleration is approximately 32.2 ft/sec^2 (9.8 m/sec^2). If you drop an apple on Earth, it falls at 1g. If an astronaut on the Space Station drops an apple, it falls too; it just doesn't look like it's falling. That's because they're all falling together: the apple, the astronaut, and the Station. But they're not falling towards the Earth, they're falling around it. But since they're all falling at the same rate, objects inside the Station appear to float in a state we call zero gravity (0g), or more accurately microgravity. In this context, the prefix micro simply means small.

NASA uses a variety of facilities to create microgravity conditions. The most "famous" way is by aircraft flying in parabolic arcs to create microgravity for tests and simulations that last 20-25 seconds. The "Vomit Comet" (KC-135) operated by the NASA's Johnson Space Center (JSC) supports ground-based microgravity research at NASA centers across the United States. The KC-135 was also used to shoot the weightless scenes in the movie "Apollo 13."

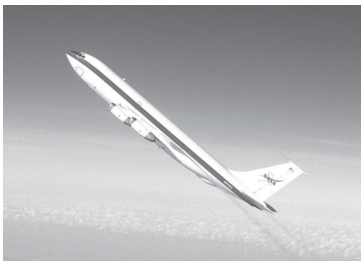

NASA KC-135

The facilities most-likely to be misconstrued as "anti-gravity chambers," are NASA's drop towers. Specifically, NASA's Glenn Research Center (GRC) has the "Zero Gravity Research Facility." It is a large, evacuated shaft some 500 feet deep that allows test packages to free-fall for just over 5 seconds. In this state of free-fall, apparent weightlessness (at or near microgravity) can be obtained. The Glenn Research

Working Draft

Center also has a 2.2 second drop tower.

Activity Four: Read the article "Culturing a Future"at: It is best to go to www.nasa.gov and search the title.

NASA's Cell Science Program

Researchers have been culturing cells for more than a hundred years. Despite this century's many technological advances, techniques for cell culturing have not changed significantly. Today, cells are typically grown in petri dishes or in flasks, just as they were a century ago. The cells are placed in these containers with a liquid **media**, a substance with nutrients the cells need to grow - and grow they do, in a flat layer on the bottom of the container. Cells grown ***in vitro***, or outside the body, in two-dimensional layers do not behave in the same way as cells grown *in vivo*, or inside the body. *In vivo* cells grow **three-dimensionally** and form tissue that consists of cells that have changed their structure to perform a specific function in the body and other components, called matrix, that the specialized cells secrete. *In vitro* cells do not specialize, or differentiate. This poses obvious limits to researchers who want to understand mechanisms that govern cell behavior and tissue formation.

Though the limitations of standard culturing practices have been apparent for some time, solutions have been slow in coming. In the 1970s, a small group at NASA's Johnson Space Center (JSC) began to think about space as a possible answer. The group theorized that if cells could be grown without the influence of Earth's gravity, they would not settle to the bottom of the culturing container; rather, they would be suspended in the media and therefore might assemble and form tissue that more closely resembles tissue in the body. Although the goal was to attempt tissue growth on Space Shuttle missions, the JSC group soon turned their efforts to creating a culturing device that *simulated* some aspects of microgravity on the ground. Stirring the cells in their containers to keep them from settling, and thus continuously free-falling through the culture media, seemed a good place to start. The NASA team devised a system in which an upright cylindrical vessel - a bioreactor about the size of a soup can was **rotated** using an electric drill. With this setup, they were attempting to establish "suspension modality." But the team had not been able to achieve this state with the model system. Then one day, they decided to turn the rotating vessel on its side. That was the moment that everything went into suspension. Dr. Neal Pellis, Chief, Biological Systems Office, NASA JSC, states,"That is how they discovered it. From there, they realized that as long as they kept the cylinder completely filled with fluid,the cells should remain suspended and no stirrer was needed." The NASA JSC team called the first devices the Slow-Turning Lateral Vessel (STLV) and the High Aspect Ratio Vessel (HARV), and they were ready for some serious testing.

An Early Believer

In 1987, J. Milburn Jessup was working at the University of Texas M. D. Anderson Cancer Center with his mentor, I. J. Fidler. Fidler's main interest was in understanding metastasis, or how **cancer** cells spread from a primary to a secondary site in the body. Fidler wondered whether there was something about the three-dimensional structure of a host tissue that made it susceptible to colonization by malignant cells. "We were thinking along the lines of trying to get some sort of culture system that would mimic some aspects of this three-dimensional growth," remembers Jessup. Pellis, then also working at the University of Texas Health Science Center, Houston, and a friend of Jessup's, recommended that he go to JSC where an old colleague, Thomas Goodwin, was working with the group that was trying to devise a new culture system. The device Jessup saw when he went to JSC was far beyond the cylinder driven by an electric drill. Jessup remembers being impressed by the NASA cell culturing system: "They had

Working Draft

long-duration motors and parts that seemed to me to indicate that the engineering aspects of this were really very well thought out. This bioreactor prototype was likely to be rugged and durable. At that point, they were looking for cells to put into it." Jessup was sure this system held promise. "I wasn't skeptical," Jessup recalls. "I was more drawn by how dedicated this group was to working hard to develop a product. They needed help in terms of resources and supplies, which we could offer, to make this bioreactor functional. I didn't have any hesitation that this would in fact be a useful culture system. I thought it was perfectly logical."

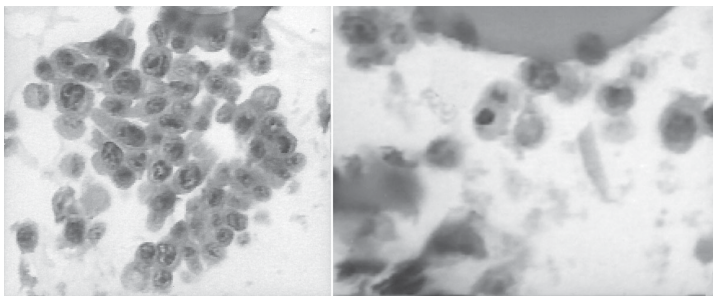

Microgravity Ground

These photos compare the results of colon carcinoma cells grown in a NASA Bioreactor flown on the STS-70 Space Shuttle in 1995 ground control experiments. The cells grown in microgravity (left) have aggregated to form masses that are larger and more similar to tissue found in the body than the cells cultured on the ground (right). The principal investigator is J.M. Jessup of Georgetown University, Washington D.C. Credit: NASA.

Jessup's confidence turns out to have been well-placed. The JSC group had tried culturing hamster kidney cells in the STLV, but the results had not been what the group had hoped for. Jessup first provided JSC with a simple human colorectal **carcinoma** cell line. Then, when that met with success, the group wanted to attempt a cancer cell/normal cell interaction - a coculture. Jessup described the result: "Fairly large tissue **aggregates** grew, and these had the ability to really recapitulate the morphology or appearance of what occurs *in vivo* in mice." Three-dimensional tissue masses, resembling a cancer tumor, had grown in the STLV. "Some years later," said Jessup, "those results were published. They demonstrated that the vessel was very good for these kinds of cocultures. We demonstrated a synergy not evident in other culture systems."

Work began on preparing a culturing system for a Shuttle flight. Although the bioreactor would be in a microgravity **environment** aboard the Space Shuttle, and the cells would therefore be in suspension without vessel rotation, the same system developed for the ground was modified for use in space. The cylinder that is the rotating bioreactor is just a part of a larger system designed for keeping cells alive by providing all the resources they would have in a body. Pellis said that JSC had developed an integrated system: "It has a reactor - the culture vessel itself - but in addition, it has its own lung, its own heart, its own food supply, and its own waste management." Adapting that system for space hardware rather than starting from scratch made the most sense.

Jessup was the first investigator to use the space hardware, although he explains that his experiment was primarily a test of the space system. JSC designed the experiment, and he provided the cells and the analysis. Once again, Jessup was providing resources that JSC needed in its quest to make their rotating wall bioreactor a functional, useful device. After several spaceflight trials, JSC's Bioreactor Demonstration System flew onboard **Space Transportation System (STS)**-70 in July 1995, with cells provided by Jessup. The experiment was not only an engineering success but also a scientific one. Jessup's sample of colon carcinoma cells aggregated to form masses 10 mm in diameter. These masses were 30 times the volume of those grown in the control experiment on the ground. The experiment was repeated in August 1997 on STS-85, and mature, differentiated tissue samples were grown again, confirming the previous results - microgravity was an environment beneficial to cell culture and tissue growth.

Interest in the rotating bioreactor is developing, for the most part, on two sides of a fence: One side is applications, meaning building tissue, whether it is tissue for research or for **transplantation**. The

Working Draft

other side is study of those properties of cells that change because the cells are in free-fall. In the next five to ten years, the rotating bioreactor will begin to routinely produce tissue for research and transplantation. The tissue produced to date in the rotating wall vessel has already offered unique research opportunities. "This is the first time," says Pellis, "that we have a look at the dynamics of a three-dimensional arrangement in a cultured setting. For instance, we can grow a human colonic polyp from individual cells. Observing that particular three-dimensional dynamic is an investigation of cancer that can lead to the development of therapeutic treatments. That is not something from 'Ripley's Believe It or Not.' That is going to happen."

The National Institutes of Health (NIH) also believe it is going to happen. Sixteen research projects involving tissue culturing in rotating wall bioreactors are currently under way at the joint NASA/NIH Center for Three-Dimensional **Tissue Culture** at the Institute of Child Health and Human Development. The two agencies joined to form this center in 1994 under an agreement that the NIH would provide the lab and NASA would provide rotating bioreactors and other support. The combination of NASA technology and NIH expertise has already resulted in the successful culture of several **infectious** agents that are difficult to grow and control in a culture setting. Pellis points to the growth of *Cyclospora*, a **parasite** that lives in berries and causes extreme gastrointestinal distress when eaten, as an example of the project's success: "No one has been able to grow *Cyclospora* in culture until recently, when researchers at the joint center took a new approach and cultured the organism with cells from the small bowel." The tissue samples grown in the rotating bioreactor at the Center are being used to design therapeutic drugs or **antibodies**, "or alternatively," said Pellis, "for designing a strain of the organism from which a vaccine could be produced." *Cyclospora* is not a big threat in America, but worldwide it is responsible for a significant percentage of infant deaths from dehydration. Researchers at the joint Center have also had success culturing the human immunodeficiency virus (HIV-1). HIV has been propagated before without the rotating bioreactor, but at the joint center, the NASA technology has made possible the propagation of the virus in human lymphoid tissue. Those samples are giving scientists an opportunity to observe the virus in full dynamic process, which should provide a new perspective on the **disease** and on possible treatments.

Tissue engineering for transplantation is also progressing well. The closest of these is a project to culture human pancreatic islet cells for transplantation into diabetic patients for the control of insulin production. A company called VivoRx is currently using the rotating bioreactor to culture the differentiated pancreatic cells, which are then encapsulated in treated seaweed membranes to make them acceptable to the human immune system. Once transplanted, the cells secrete the appropriate amount of insulin for regulating the body's blood sugar levels. In the rotating bioreactor, the small number of pancreatic cells provided by donors will be expanded to the number of cells required to successfully treat patients presently requiring daily insulin injections. The encapsulated cells are currently being tested in human patients.

A Novel Look

The other side of the fence in bioreactor research is using the culture technique to gain what Pellis calls "a novel look at the cell." Pellis notes that while using the bioreactor to engineer better tissue samples, several researchers have observed that cells adopt some interesting adaptive modes while free-falling in the rotating bioreactor on the ground and in orbit. Pellis believes that by watching the reaction of the cells to the new environment of suspension or microgravity, scientists will discover more about the mechanisms that control the cells' behavior. "Besides being able to grow tissues,"said Pellis, "we now have a new and fascinating way to see inside the cell."

Working Draft

Timothy Hammond is an example of a researcher who started out using the bioreactor to engineer tissue and ended up using it to find the mechanisms within the cells that control **differentiation**. Hammond and his team at the Tulane Environmental Astrobiology Center, which is jointly sponsored by Tulane University, Xavier University, and the VA Medical Center in New Orleans, were studying **protein** receptors that bind common toxins in the proximal tubule, a microscopic tube in the kidney. Hammond explained that the kidney often is damaged by drugs and toxins contained in strong antibiotics. "We were interested in the proteins that get bound in the kidney by these toxins. We wanted to culture the cells that make these proteins, to develop protective agents," said Hammond. "But the problem is that there is no cell culture line that expresses the relevant proteins. If you take a kidney cell and put it into a cell culture, a day later it no longer has any of its special features. So we had a lot of interest in finding a cell culture method that would keep the special features of tissues intact."

Hammond tried over 400 different cell types and cell culture techniques searching for a way to retain the special features of the differentiated cells of the tubule, such as microvilli, hair-like structures found in some tissues. He met with no success. Then he read about results of culture experiments in the rotating bioreactor, and he immediately contacted NASA. "We tried the rotating wall vessel," remembered Hammond, "and to our shock, surprise, and delight, the tissue was beautiful. All the hair, the microvilli, grew on the cells, and they expressed all the specialized proteins we needed. The results were very dramatic."

Though these results were striking, Hammond thought that culturing the cells in space might produce even more spectacular samples because in orbit, the tissue masses would not be limited by size. On Earth, when the cells aggregate into three-dimensional masses in the rotating bioreactor, they eventually reach a size at which they are too heavy to be suspended by the rotating action of the vessel. If the rotation is increased to keep the aggregates suspended, they are thrown against the vessel wall, which damages the tissue. "If we were truly going to understand how different cells grow together to form a tissue with all its medical implications," said Hammond, "we had to find some way to get out of the limits caused by gravity. That is why we wanted to fly the **renal** tubular cells."

Hammond's first opportunity to conduct an experiment in microgravity was during the sixth *Mir* research increment, from September 1997 to January 1998. Hammond chose to grow rat renal tubular cells in NASA's Biotechnology Specimen Temperature Controller, a cell **incubator**, onboard the Russian space station *Mir*. He chose rat kidney cells for his sample because he needed cells that would grow and differentiate over the entire four months to help verify the function of the hardware. Hammond reported that on *Mir*, the tissue aggregates "grew beautifully" under the care of astronaut David Wolf, one of the rotating wall bioreactor's three inventors. "We got gorgeous cell aggregates, bigger than the aggregates grown in the control experiment on the ground," said Hammond. "And we saw the proteins that we were interested in, the tubular toxin protein receptors, expressed in flight."

During the STS-90 shuttle flight in April 1998, Hammond's human renal tubular cells formed large tissue aggregates (visible as white masses in the lower left corner of the sample above). Hammond was able to use the samples to identify key genes in the control of differentiation.

Hammond was pleased with these results, but he wanted to know what mechanism in the cells was causing differentiation and expression of the desired

Working Draft

Astronaut David Wolf makes notes about Hammond's sample of rat renal tubular cells (above his head) onboard Russian Space Station *Mir*. Wolf is one of the co-inventors of NASA's rotating wall bioreactors.

proteins in microgravity. **Genes** control these functions, but identifying which genes are doing the controlling out of the millions present in a cell is close to impossible. Hammond reasoned that a comparison of the genes that are active in the cells during culturing in spaceflight to those that are active in culture on the ground might help in pinpointing the specific genes responsible for differentiation. In early 1998, Hammond cultured a sample of human renal tubular cells in the bioreactor on STS-90 for six days. Hammond reports that by comparing the activity of 10,000 genes in the flight and ground cultures, several of the control genes for differentiation and three-dimensional tissue formation were identified. Hammond eventually wants to use these findings to make kidney implants for hormonal therapy. "With the knowledge of the control genes," says Hammond, "we could control the proteins produced by tissue in the rotating vessel by genetic manipulation so we can give the patient a better, longer-lasting implant. Our experiment is a very exciting piece of basic science, but it does have clinical correlates." Hammond is certain that the rotating wall vessel will bring such success to many other researchers in the future. "I believe that NASA's biotechnology program is going to revolutionize the whole field of cell biology," says Hammond. "In fact, it already has."

A Keyhole

While the rotating bioreactor is providing researchers with a new way to see inside a cell, it is also expected to contribute to our efforts to look out into our solar system and beyond. Jessup and Pellis share the view that research conducted in the rotating bioreactor will be a prerequisite for space travel and colonization. Jessup sees the primary role of the cell culturing program as helping to ensure astronaut health. The program can do this, he says, through research that "provides the underpinnings for many of the health disorders that occur in space, such as anemia, bone matrix loss, and kidney stone formation." Jessup points to investigators already using the bioreactor to solve these problems. Among them are Pellis, who has done work examining the behavior of immune cells in microgravity that may lend insight into the changes astronauts experience in their immune systems during spaceflight, and Lisa Freed and Gordana Vunjak-Novakovic, researchers at the Massachusetts Institute of Technology, who believe that results from their experiment to grow **cartilage** on *Mir* might provide clues for understanding why astronauts experience a weakening of muscle and bone while in space. (See the "Women in Science" page 9).

Jessup also sees a continued role for the rotating bioreactor once astronauts are en route to new planetary destinations. The bioreactor can provide a means for culturing red blood cells or skin in the event of astronaut trauma. It can also be used to culture unicellular organisms like blue-green algae as a supplemental food source or a means of replenishing the air supply for the spacecraft or for a planetary colony. "Because such organisms are biologically renewable," Jessup says, "they may be cheaper in the long run than chemical agents that could be used to create air and easier to transport." Pellis adds that there is potential for using the findings from bioreactor research to send cells into space as exploratory probes. Cell cultures could be designed to respond to environmental conditions of other planetary bodies in such a way that scientists could judge whether an environment is suitable for life. "Using these probes," says Pellis, "we could determine if the atmosphere is supportive of cells, if there is water, or if the environment is amenable to propagation."

Though Jessup is enthusiastic about the contributions the bioreactor will make toward engineering tissue

Working Draft

on Earth and toward the study of novel aspects of cell biology, it is the program's role in future space exploration that he finds most compelling: "In the next millennium, we will move off the Earth," says Jessup, "and quite frankly, I think that this bioreactor technology is the primitive forerunner of the technology that will enable us to do that. The bioreactor represents a keyhole to the future."

Women in Science

In their 12 years of working together, Lisa Freed and Gordana Vunjak-Novakovic have shared some big moments. Witnessing the spectacular night launch of the Space Shuttle that carried their tissue culture experiments to the Russian Space Station *Mir*, in September 1996 was one; finding out, four months later, that the cartilage cells had survived their stay in microgravity was another. The researchers met in 1986, when Freed was a graduate student and Vunjak-Novakovic was a Fulbright scholar at the Massachusetts Institute of Technology (MIT). The two worked together on a bioreactor to detoxify blood. Although it wasn't a tissue growth project, the eventual focus of their research together, it demonstrated their potential as partners. Says Vunjak-Novakovic, "We discovered that we worked very nicely together, and that has continued over the years." Freed points out that they each bring different strengths and backgrounds to their work: "I was trained in medicine and biotechnology, and Gordana in chemical engineering. Gordana is stronger in math, and I have a little more experience in the medical side of things."

Lisa Freed (center), Gordana Vunjak-Novakovic (right), and their graduate student Bojana Obradovic (left) with NASA's rotating bioreactor containing engineered cartilage. Photo credit: Donna Coveney, MIT

Their NASA research began when Freed became interested in tissue engineering as a postdoc at MIT. She was using conventional bioreactors to culture cartilage and heard of NASA's rotating bioreactor. "It looked like a very promising culture system," remembered Freed, "because the cells could be grown in free suspension without a lot of potentially damaging **shear forces**." The rotating bioreactor keeps the cells suspended without resorting to the use of stirrers that cause shear and damage tissue. Freed submitted a proposal to NASA and was awarded a grant in 1992. With Vunjak-Novakovic as her co-investigator and two rotating bioreactors in their lab at MIT, Freed embarked on ground-based studies to grow cartilage. Vunjak-Novakovic remembers that they were surprised at first "by how good the tissues were that we could grow in the bioreactors," but she notes that it is not unusual for research to start with a surprise: "There is a learning curve in this kind of work. You design an experiment and really discover something, and then you try to take advantage of that discovery and design another experiment to follow up on it."

In 1994, the team was selected by NASA for a spaceflight opportunity. Cartilage is a model cell system, and it was hoped that cartilage tissue grown in space might provide clues to understanding and perhaps preventing or treating the weakening of **musculoskeletal** tissue that astronauts experience during spaceflight. "The information that you learn from experimenting with cartilage cells," explained Freed, "can be extended to other cells, like muscle or bone cells." In addition, cartilage requires less oxygen and fewer nutrients to survive than other tissues, which made cartilage perfect for *Mir*, where resources are limited. The survival of the cartilage cells over four months in microgravity demonstrated that long-term spaceflight studies

Working Draft

Activity Five: Group students in pairs and require them to look up personalities such as those found at: http://www.spacetoday.org/History/SpaceWomen.html or http://observe.arc.nasa.gov/nasa/ootw/1998/ootw_980211/ob980211.html or http://microgravity.nasa.gov/WOMEN/ or http://www.jsc.nasa.gov/Bios/ The students should write a report and plan a presentation preferably using PowerPoint or their own drawings on poster board. (For assessment tips see Teacher Notes).

are feasible. The space-grown tissue, when compared to the control experiment on Earth, also revealed some interesting differences. The cells from both the space and control experiments were healthy, but the tissue that grew in microgravity was mechanically weaker and smaller than the tissue that formed in the ground experiment. Freed explained that the space-grown tissue contained less of a key component, glycosaminoglycan, that the cells secrete. Vunjak-Novakovic said that this clue may help them to understand not only the weakening of tissue experienced by astronauts but also similar diseases experienced by people on Earth. Freed reported that they have already received calls to their lab from people who suffer from cartilage problems. "They are waiting for what we are doing in the lab to be ready for them," she said. "It is always hard to explain that research goes very slowly and that we are working as hard and as fast as we can." Freed and Vunjak-Novakovic share the dream that tissue may one day be engineered for replacement of damaged or congenitally defective tissue. Their research is bringing the realization of that big moment ever closer.

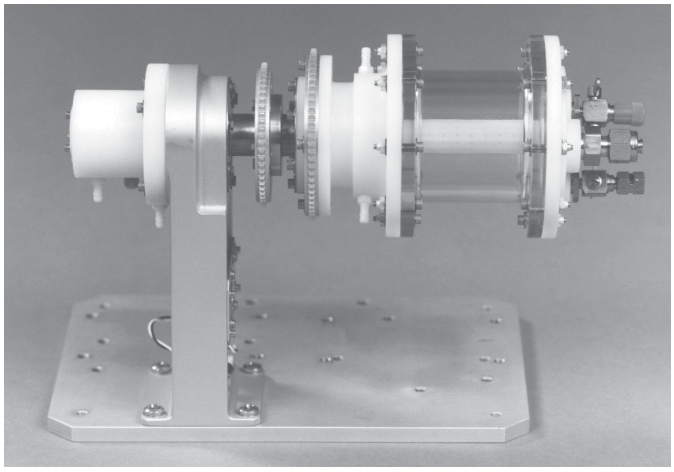

A ground-test model of the NASA Bioreactor shows the key element, a rotating plastic cylinder enclosing a tubular membrane that infuses growth media and oxygen and removes wastes.

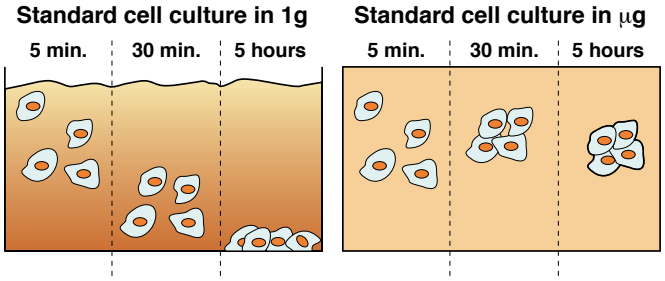

Cell constructs grown in a rotating bioreactor on Earth (left) eventually become too large to stay suspended in the nutrient media. In the microgravity of orbit, the cells stay suspended. Rotation then is needed for gentle stirring to replenish the media around the cells.

Turning a Problem on Its Side

It has long been established that cells and tissue growing in microgravity - the weightless condition obtained in space - can grow and **mutate** in ways different than on Earth. A perpetual challenge for the experimental study of these phenomena has been simulating the conditions of space so that complete laboratory studies can be done by numerous investigators on Earth. The simulated growth of mammalian cells in tissue culture needed to duplicate the quiet conditions of orbital free-fall in a way that allowed for maintaining fresh media and oxygenation. To solve the problem, NASA in the 1980s developed the bioreactor, a can-like vessel equipped with a membrane for gas exchange and ports for media exchange and sampling. As the bioreactor turns, the cells continually fall through the medium yet never hit bottom. Under these quiet conditions, the cells "self-assemble" to form clusters that sometimes grow and differentiate much as they would in the body.

Working Draft

Eventually, on Earth, the clusters become too large to fall slowly and research has to be continued in the true weightlessness of space. It has been well established that a number of cell types grow in the bioreactor on Earth for extended periods in ways that resemble tissue-like behavior. For this reason, the bioreactor also provides cell culture studies with a new tool for the study of three-dimensional (3-D) cell growth and differentiation. Bioreactors have been used aboard the *Mir* Space Station to grow larger cultures than even **terrestrial**-bioreactors can support. Several cancer types, including breast and colon cancer cells, have been studied in this manner. Continued research using the NASA Bioreactor is planned aboard the International Space Station.

Classroom Bioreactor (CB)

The Classroom Bioreactor (CB) is built from parts that are easily obtained and assembled. It uses a simple motor drive and a rock tumbler with syringe ports. The easy to assemble wooden frame supports the apparatus and is designed to be built in a classroom setting. The CB will primarily be used to examine the effect of microgravity on **germination** of seeds, but also has the potential to be autoclaved and used **aseptically** for other tissue culture experiments similar to the NASA-designed ground-based Rotating Wall Bioreactors and

Principal Investigator Dr. Vimlarani Chopra, Assistant Professor at the University of Texas Medical Branch, Galveston, TX, is culturing precervical cancer cells with normal endothelial cells and fibroblasts in order to sequentially determine the factors that govern gynecological cancer growth and metastasis, governed by a process known as tumor angiogenesis. She is conducting experiments that will determine if 3-D constructs will respond to antiangiogenic agents. Similarly, Dr. Robert Richmond, director of the Radiation and Cell Biology Laboratory at NASA's Marshall Space Flight Center (MSFC) in Huntsville, AL, is also culturing mammary cells from an individual susceptible to breast cancer. Space exploration involves increased exposures of crewmembers to radiation. He is conducting experiments that will determine if 3-D tissue constructs of normal breast tissue in the bioreactor will respond to estrogen. What we learn from these cells could help justify methods of female crew selection, and help manage cervical, ovarian and breast cancer in the national population at the same time. Bioreactors could be used to tailor hormonal and antiangiogenic therapies that more closely match what will stop growth of cancer cells with minimal side effects for the patient. Besides, investigators like Dr. Jeanne Becker and her colleagues at the University of Florida, Gainesville, have flown their experiments on growth of ovarian cancer cells in the microgravity environment on ISS in 2001. Also, Dr. Leland Chung of Emory University is planning to send his experiments related to stromal prostate cancer growth on the STS-107 mission scheduled for launch in 2003.

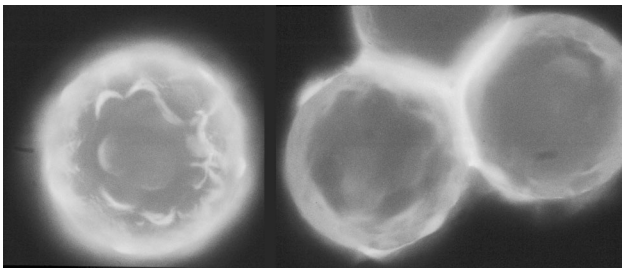

Immunoflurosence staining with anticytokeratin antibody of 3D aggregates of tumor-derived epithelial cells (400x magnification) from cervical cancer patients grown in analog microgravity environment in a NASA bioreactor (STLV) on microcarrier beads. The principal investigator is Dr. V. Chopra of UTMB, Galveston, TX.

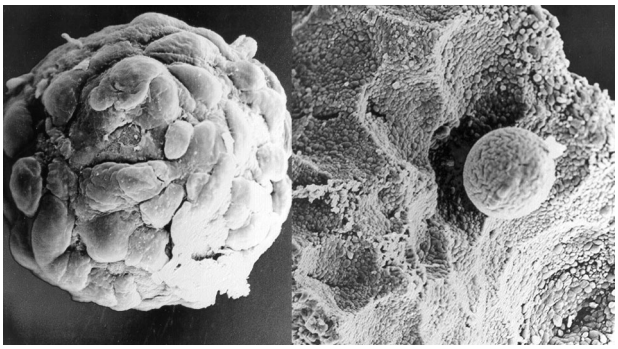

Dr. V. Chopra was able to use the cell aggregates to identify key genes that govern tumor angiogenesis: scanning electron micrograph of cells adhering to beads on day-2 in culture (1040x maginfication, Left), and day-20 in culture (394x magnification, Right).

Working Draft

the flight-based Bioreactor Demonstration System. This is a very user-friendly versatile system and can be easily used in simple school settings unlike commercially available sophisticated Rotating Wall Bioreactors (STLV and HARV). Also, this bioreactor generates the analog simulated microgravity environment and has the potential to mimic the *in vivo* host **microenvironment**. Classroom Bioreactor offers easy handling of any experiment to be performed with any biological system like.

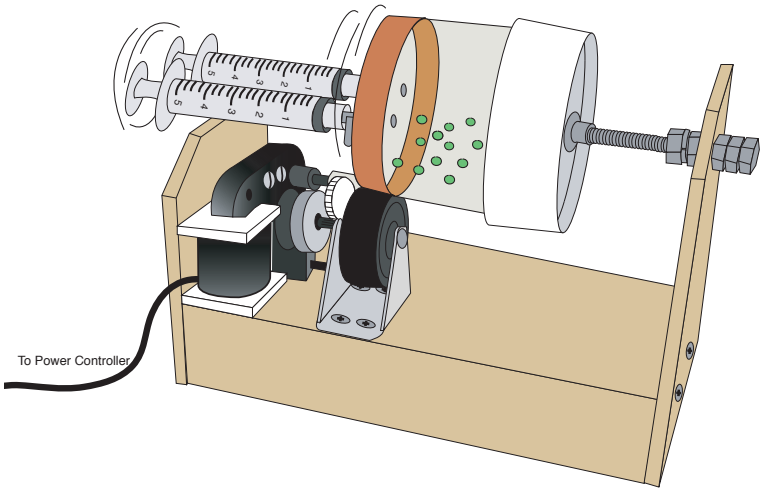

The Classroom Bioreactor

Part I: Building the Classroom Bioreactor

Have students build a bioreactor using the assembly instructions given and perform the experiments with **lentils** as outlined.

A. Materials

Classroom Bioreactor Materials				
Item	Vendor	Quantity	Unit	Total
Toy Rock Tumbler[1] (#635 Rolling Stones™)	Craft Store	1	$30.00	$30.00
2” x 4” Pine Stud - 7” long	Home Supply Store	1	$1.99	$1.99
1/4” Plywood - 3-1/2" x 5-1/2"	Home Supply Store	1	$1.99	$1.99
1/4” Plywood - 3-1/2” x 4”	Home Supply Store	-	-	-
1” Phillips head wood screws	Home Supply Store	8	$0.83	$6.64
2” small caster (fixed base - not swivel)	Home Supply Store	1	$3.24	$3.24
1/8” x 2” long machine screws[2] (#6 size)	Home Supply Store	3	$0.83	$2.49
Nuts to match the machine screws	Home Supply Store	9	-	-
Lock nuts to match the machine screws	Home Supply Store	3	$0.83	$2.49
5/16” x 3” long hex bolt	Home Supply Store	1	$0.19	$0.19
Nuts to match hex bolt	Home Supply Store	6	$0.05	$0.30
Lock washer to match hex bolt	Home Supply Store	1	$0.10	$0.10
5/16” tee nut	Home Supply Store	1	$0.83	$0.83
Goop™ marine brand glue or Superglue	Home Supply Store	1	$4.97	$4.97
Nalgene™ Polypropylene screwcap jar (125 ml)[3] (#02-890-15C)	Fisher Scientific (1-800-766-7000)	1 pk	$54.65	$54.65
Leurlock™ valves (plastic or metal)	Pharmacy/Hospital	2	$0.50	$1.00
5 ml Leurlock™ style plastic syringes	Pharmacy/Hospital	2	$0.95	$1.90
Laboratory variable power transformer (Variac) (3PN1010B)	Electronics Store	1	$60.00	$60.00
Total				$172.78

Working Draft

The use or mention of specific products in this guide does not imply endorsement by NASA. In many cases, alternative products are available and will provide equivalent or similar functions. Trade names are the property of the respective manufacturers and are used as examples. Prices given are typical for items purchased in Huntsville, Alabama in 2002. Prices will vary with market demands and in different geographic areas.

1. Toy rock tumblers are available from art and craft supply stores and from some science supply catalogs. The kind of tumbler used here has a motor with a shaft upon which rests the tumbler container. The rotation of the shaft causes the tumbler container to rotate.

2. The hardware listed here may not be precisely what is needed. Be sure the hardware fits the mounting holes in the rock tumbler motor. There may be variations in different rock tumbler motors from the one used to make the bioreactor described here.

3. The Nalgene™ screwcap plastic jars are available from science supply catalogs.

4. Luerlock™ laboratory valves work best for the bioreactor vessel. These are used in IV systems in hospitals. Aquarium air valves can be substituted and are less expensive. If you choose to use aquarium valves, you will need to attach a short length of aquarium hose to the valve and connect the other end to the 5cc plastic syringe.

5. Variable power supplies (commercially know as Variacs) can be purchased from electronic/computer supply stores. These may be available in science classrooms already, since they are used to vary current input (speed) for many experiments.

B. Tools

1. Wood saw

2. Electric drill with appropriate sized bits. (Note: When drilling holes through the plastic jar bottom, apply drill pressure very slowly or else the drill bit may damage the plastic.)

3. Eye protection

4. Pliers and assorted screw drivers

5. Sand paper

6. Paint for the wood (optional)

C. Instructions for the Assembly of Classroom Bioreactor

1. Remove the motor and gear mount from the rock tumbler. Recycle or discard the plastic tumbler case. Examine the motor. There may be variations in the design of the motor from the one pictured in the diagram. These variations may require changes in the sizes of parts or the bioreactor design.

2. Construct the wooden base by joining the two pieces of plywood to the ends of the two by four with wood screws. Do not glue the pieces in place. It will be easier to drill holes with the base disassembled.

3. Glue the tee nut to the center of the plastic jar lid. Make sure the nut is located in the exact center of the lid.

Working Draft

4. Mount the motor to the shorter plywood end. Mark screw holes for mounting the motor and drill.

5. Insert the screws through the mounting holes in the motor and twist a nut on to each screw. Adjust the nut so that when the screws are extended through the plywood holes, the motor rests next to the wood. Slip another nut on to each screw, a lock washer and then another nut. Tighten them to hold the motor securely in place.

6. Using screws, mount the caster near the motor as shown. Select the exact location for the caster by resting the jar on the motor shaft. The jar should be horizontal and supported by both the motor shaft and the caster wheel. The other end of the jar will be supported by the hex bolt threaded into the tee nut that is glued to the jar lid.

7. When the glue for the tee nut is set, determine the placement of the hole for the hex bolt in the tall plywood end. Drill a slightly larger hole for the bolt than is needed. This will provide some play in the bolt that will help in positioning the bioreactor vessel.

8. Adjust the length of the hex bolt by threading one or more nuts on to the shaft. Slip the bolt through the hole in the tall plywood end and two more nuts separated with a lock washer in between. Tighten the nuts to each other but leave a small gap between the end nuts and the plywood. This will enable the bolt to wobble a bit.

9. Test the alignment of the jar to the motor shaft and caster wheel. If acceptable, begin mounting the valves to the jar bottom.

10. Drill holes into the bottom of the plastic bottle to insert the valves. The valves should be located near the center of the bottom to be able to clear the motor during rotation.

11. Glue the valves in place.

12. When the glue has set, attach the syringes (insert short pieces of aquarium tubing between the syringes and the valves if using aquarium valves).

13. Fill the vessel with water to test for leaks. If no leaks are present, the bioreactor is ready for use.

D. Adjusting the Classroom Bioreactor

1. Use a variable transformer to power the bioreactor motor. Start the vessel turning slowly.

2. After several minutes, the vessel may speed up because the water inside the vessel will have come up to speed and the motor will need less power to maintain the slower speed. Readjust the speed to the desired rate.

3. If the bioreactor vessel slips on the motor shaft, provide extra friction by stretching a fat rubber band around the vessel where it contacts the shaft to provide extra friction.

Working Draft

Part II: Laboratory Activity

A. Experiment: Effect of Altered Gravity Conditions on Germination and Sprouting of Lentils

Perform a simple experiment using the following materials and instructions.

B. Materials

1. Balance
2. Weigh boat
3. Seeds (Lentils) of choice
4. Flasks
5. Tap water
6. Spatula
7. Metric Ruler
8. Camera
9. Pots
10. Potting Soil
11. Forceps
12. Variac (variable transformer)
13. Classroom Bioreactor

C. Experimental Protocol

1. Weigh 5g of dry seeds in a weigh boat using a standard balance.

2.. Soak them in regular tap water using a standard glass or plastic beaker for one hour at room temperature (28-30°C) on the bench top.

3. Unscrew and open the lid of the CB and transfer the seeds from the flask to the CB by using a standard spatula.

4. Fill the CB with tap water and screw back the lid on the bioreactor.

5. Attach the CB to the stand and rotate it at 10 Rotations Per Minute (RPM) for 5-8 days at room temperature, by physically adjusting the speed after counting the rotations per minute using a standard watch.

D. Experimental Controls

1. Weigh 5g of dry seeds in a weigh boat using a standard balance (same as above).

2. Place seeds in a beaker and soak them in tap water.

3. Cover the beaker with aluminum foil, and make holes in it, to allow for aeration.

4. Leave soaked seeds in the beaker on the bench top for the entire duration of the experiment in the Earth's gravity conditions.

5. Additional controls (similar to CB) can be set by using conventional Rotating Wall Bioreactors (STLV/HARV) manufactured and sold by Synthecon Inc., Houston, TX.

6. At the end of the experiment the germinated seeds from control experiments should be planted in soil.

Working Draft

7. Document the changes the results of control experiments by taking pictures and recording the data. Compare the results of control experiments with that of experiments performed in the CB.

E. Recording Results

1. Record the seed weight by using the standard balance, seed length, and sprout length by using a standard metric ruler everyday at the same time for control and experimental group.

2. Document the experimental results by taking pictures using a standard or digital camera and using simple graph programs available on Macintosh or PC computers to show the changes in the germination patterns of the contol versus the experiment group.

3. The seeds were planted in the ground after germination (5-8 days) and examined for the changes in sprouting.

4. Plot graphs based on seed weight, seed length, sprout length, size of plants, etc. as a function of time and gravity conditions (CB vs Control).

5. Use the Variac to adjust the speed of the CB by counting the RPM.

6. The experiment should run in the CB for 5-8 days.

7. At the end of experiment plant the sprouted seeds in the pots.

F. Additional Experiments

1. Repeat the experiments with the same seed under different gravity conditions by changing the speed of the CB by using the variable transformer (Variac). Compare these results with the results obtained from the original experiment.

   - Have students discuss the effect of change in gravity conditions on sprouting of seeds.

2. Repeat the experiments with seeds different in size from the original seeds under different gravity conditions (Seed weight: Still use 5g). Once again the speed of the CB can be changed by using the variable transformer. Compare these results with the results obtained from the original experiment.

   - Have students discuss the effect of change in gravity conditions on sprouting of seeds with different mass, size, and shape.

Working Draft

CB-Plant Data Sheet

Date: _____ Tested by: _____

Description of sample before starting experiment:

Description of seed samples (Take pictures and describe):

Day 0:

Day 1:

Day 2:

Day 3:

Day 4:

Day 5:

Day 6:

Day 7:

Day 8:

Seed Data:	Day 1	Day 2	Day 3	Day 4	Day 5	Day 6	Day 7
Length of Seeds (cm)							
Weight of seeds (cm)							
Length of sprouts (cm)							

Plant Data:

Day of Sprouting (date)

Length of sapling (cm)							
Number of leaves (#)							
Size of leaves (cm)							
Plot graphs as needed							

Working Draft

Glossary

acceleration: change in velocity

aggregate: a mass, assemblage or sum of cells

antibodies: protein molecules produced as a primary immune defense

analogue: thing or part which corresponds with something else in construction, function, qualities, etc.

aseptic: free from septic matter or disease producing bacteria

bioreactor: a culture vessel used to grow living cells and study other biological processes

cartilage: a tough, elastic, fibrous connective tissue found in various parts of the body, such as the joints, outer ear, and larynx; a major constituent of the embryonic and young vertebrate skeleton, it is converted largely to bone with maturation

cancer: a malignant new growth anywhere in the body of a person or animal

carcinoma: any malignant tumor derived from epithelial tissue

cultivate: to grow cells from humans, animals and plants

differentiation: the process by which cells or tissues undergo a change toward a more specialized form or function

disease: to interrupt or impair any or all the natural and regular functions of an organ in a living body

environment: all the conditions, circumstances and influences surrounding and affecting the development of an organism or group of organisms

free-fall: falling in a gravitational field where the acceleration is the same as that due to gravity alone

gravity: the force that tends to draw all bodies in the earth's sphere toward the center of the earth

genes: any of the elements by which hereditary characteristics are transmitted and determined

germination: to sprout or bud

in vitro: in an artificial environment outside the living organism

incubator: an apparatus in which environmental conditions, such as temperature and humidity, can be controlled

infectious: caused by a pathogenic agent

International Space Station (ISS): an experimental laboratory established using International collaboration orbiting around Earth

lentils: an annual plant belonging to the pea family with small edible seeds

luerlock: interlocking fitting for syringes, which unite firmly by intertwining

media: the substance in which a specific organism lives and thrives

microenvironment: the immediate physical and chemical surroundings of a microorganism

microgravity: an environment in which the apparent weight of a system is small compared to its actual weight (due to gravity)

musculoskeletal: relating to or involving the muscles and the skeleton

mutate: change in genetic material inside a cell

parasite: an organism that grows, feeds, and is sheltered on or in a different organism while contributing nothing to the survival of its host

payload: experimental hardware or facility on board STS or ISS missions

Working Draft

protein: any of a large group of nitrogenous organic compounds that are essential constituents of living cells

renal: relating to or in the region of the kidneys

rotate: to cause to turn around as a wheel on its axis

shear force: a tangential force acting on one face of an object while the opposite face is held fixed

Space Transportation System (STS): the space vehicle used to transport crew members and payloads to and from the International Space Station

three-dimensional: having a specified number of dimensions, measurable as a cube as a three dimensional object

terrestrial: existing on Earth

tissue culture: the process or science of growing tissue artificially in a special medium

transformer: to change in potential or type set of currents in electricity

transplant: to transfer tissue or an organ from one part of the body or from one individual to another

weightlessness: having little or no apparent weight; specially lacking acceleration of gravity or other external force

Acknowledgements:

Debbie Bulgher
NASA Cell Sciences Outreach
Johnson Space Center, TX

Vimlarani Chopra, PhD.
Assistant Professor, Department of Obstetrics and Gynecology
UTMB, Galveston, TX.

Dr. Neal Pellis
Chief, Biological Systems Office
Johnson Space Center, TX

Denise Richardson
Adjunct Professor, Science Education
Mississippi State University, MS

Twila Schneider
NASA Physical Sciences, Education Specialist
Infinity Technology Inc.
Marshall Space Flight Center, AL

Gregory Vogt, EdD
Colorado State University, CO

Dan Woodard
Lead NASA Physical Sciences Outreach and Education
Marshall Space Flight Center, AL

Working Draft

References:

Chopra V, Dinh TV and Hannigan EV. Three-dimensional endothelial-tumor-derived epithelial cell interactions in human cervical cancers. *In Vitro Cell Dev. Biol-Animal* 33: 432-442, 1997.

Duray PH, Hatfill SJ, and Pellis NR. Tissue culture in Microgravity. *Science and Medicine* 4: 46-55, 1997.

Freed LE, Langer R, Martin I, Pellis NR, and Vunjak-Novakovic G. Tissue Engineering of cartilage in space. *Proc. Natl. Acad. Sci.* (USA) 94: 13885-13890, 1997.

Unsworth BR and Lelkis PI. Growing Tissues in Microgravity. *Nature Medicine* 4: 901-907, 1998.

Web sites:

http://SpaceResearch.nasa.gov
http://microgravity.nasa.gov
http://science.nasa.gov
http://liftoff.msfc.nasa.gov
http://kids.msfc.nasa.gov
http://asgsb.indstate.edu/factsheets/plant.html

Evaluation:

The activities in this educational brief help students achieve mastery of national standards for mathematics, science and technology, including:

Principles of Standards for School Mathematics by National Council of Teachers of Mathematics, 2000, Grades 6-8, explaining measurements and number options.

National Science Education Standards by the National Research Council, 1996, Grades 5-8 explaining concepts, processes, characteristics and change in biological properties as a result of change in gravity conditions.

Standards for Technological Literacy: Content for the Study of Technology by the International Technology Education Association, 2000, Grades 6-8 explaining nature of technology and association of science with technology. Technology also provides tools for investigation, inquiry and analysis.

Working Draft

Please take a moment to evaluate this product at http://ehb2.gsfc.nasa.gov/edcats/educational_brief
Your evaluation and suggestions are vital to continually improving NASA educational materials.
Thank you.