Commercial Payloads Flow

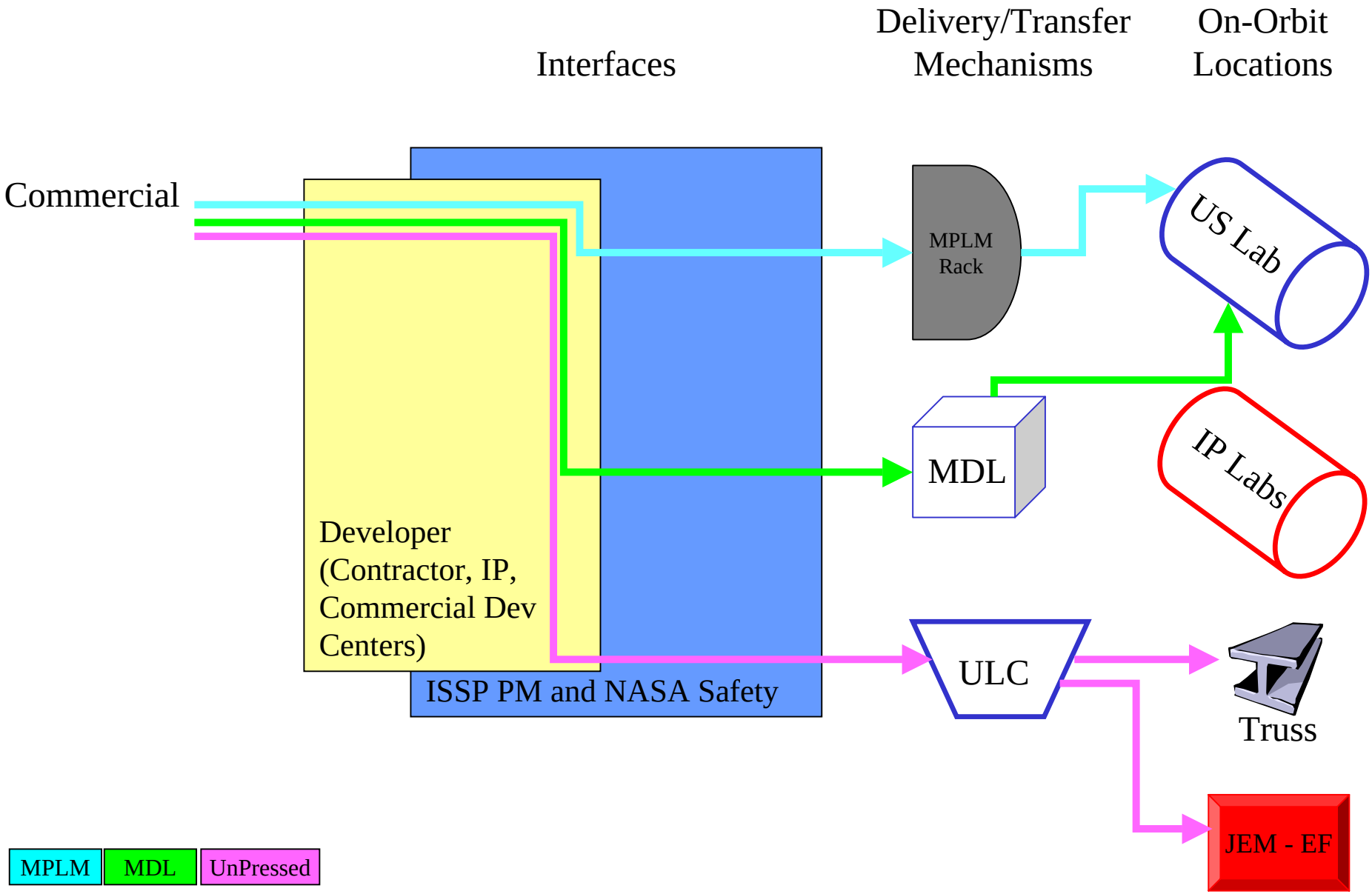

NASA Scientific Payloads Flow

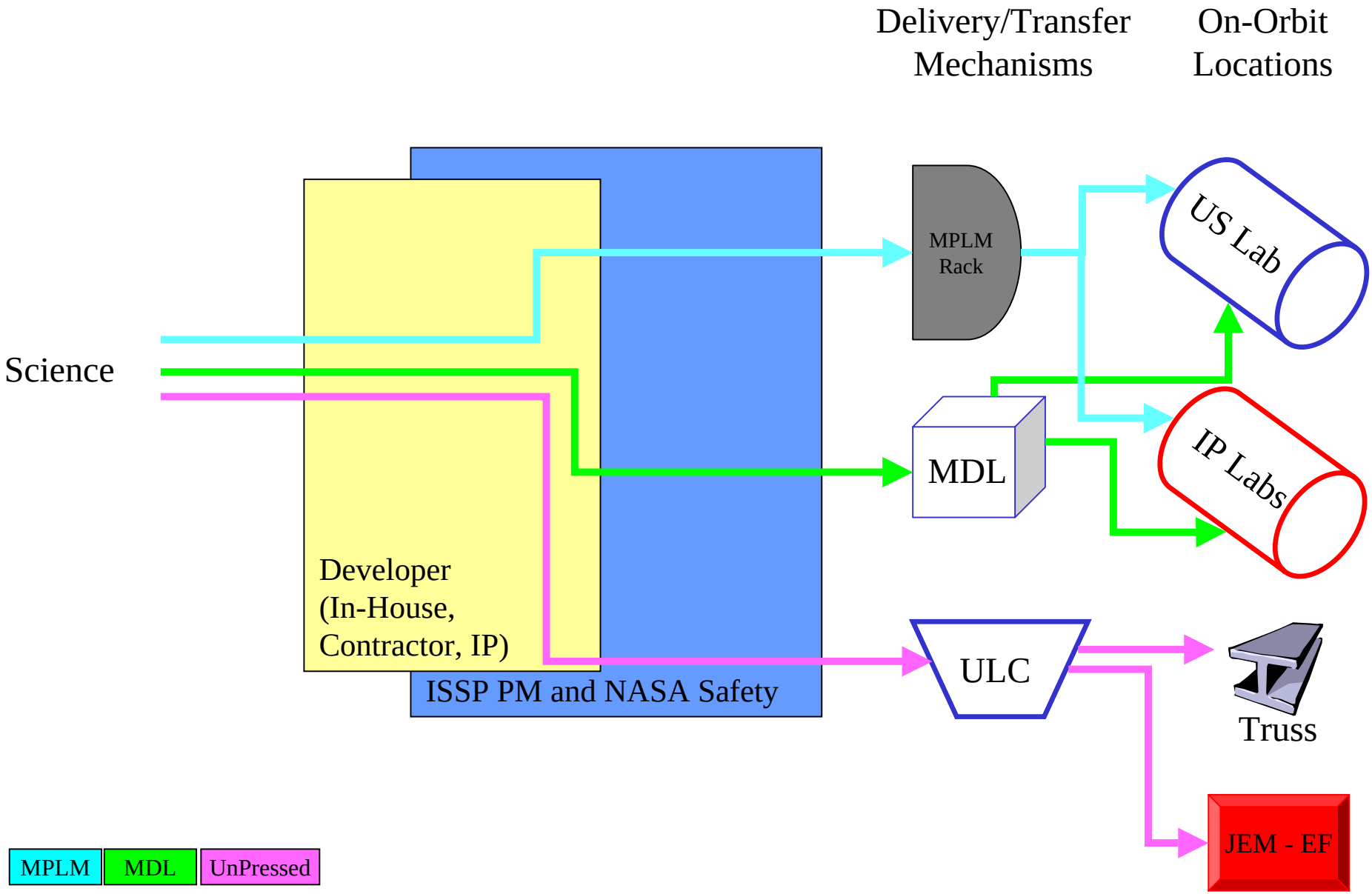

NASA Technical Payloads Flow

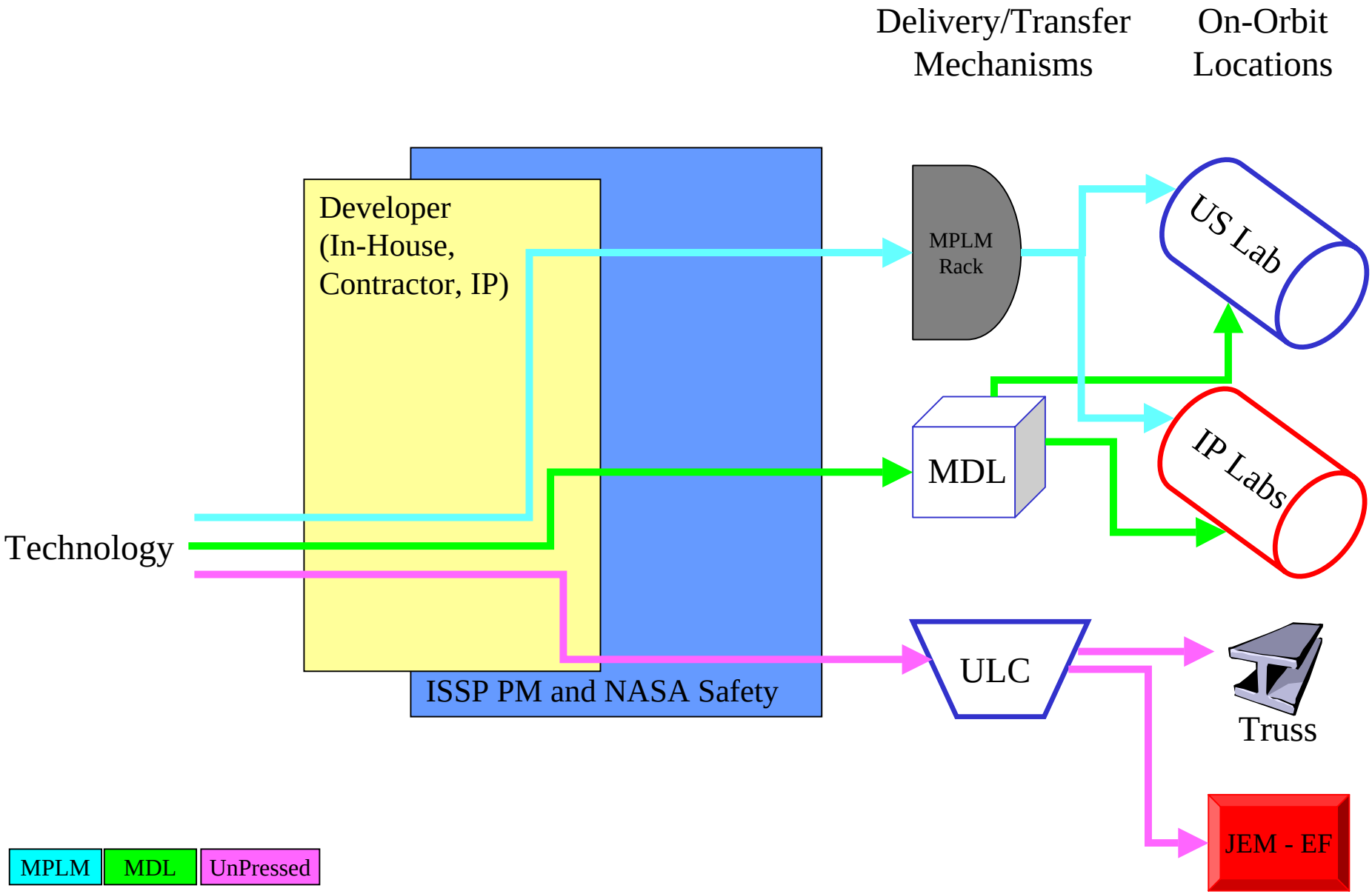

Payload Complexity

(as a Function of Options)

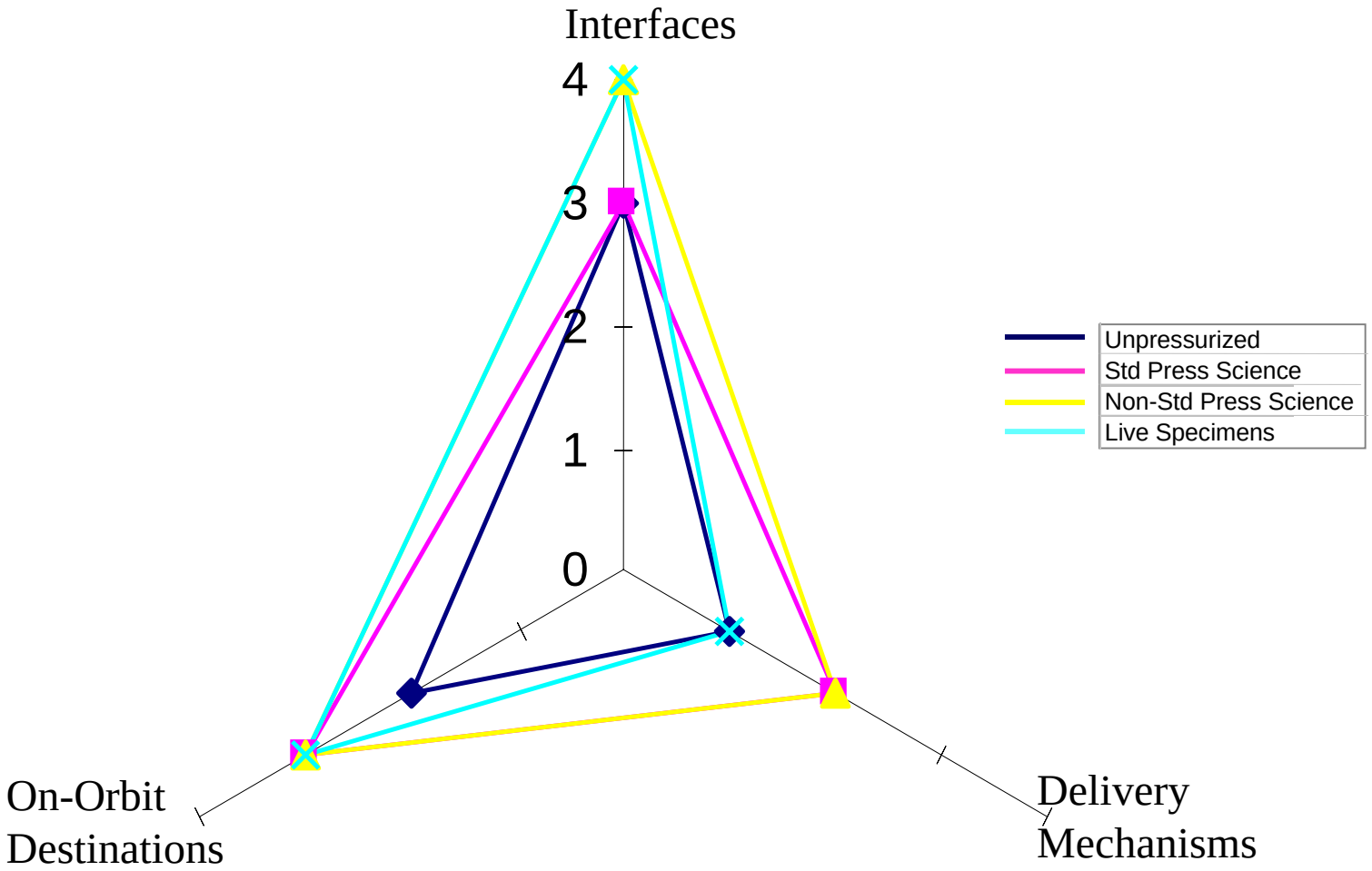

Interface Complexity

Payload Class	Crew Interface Req'ts	Delivery Support Req'ts	On-Orbit Flexibility	POIC Support Req'ts	Overall Complexity
Live Specimens					
Standard Pressurized Payload					
Non-Std Pressurized Payload					
Reflight of Pressurized Payload					
Multi-Use Hardware					
Standard Attached Payloads					
Non-Std Attached Payload					

LOW MED HIGH

Generic End-to-End Cycle Time for OBPR First Flight Payloads

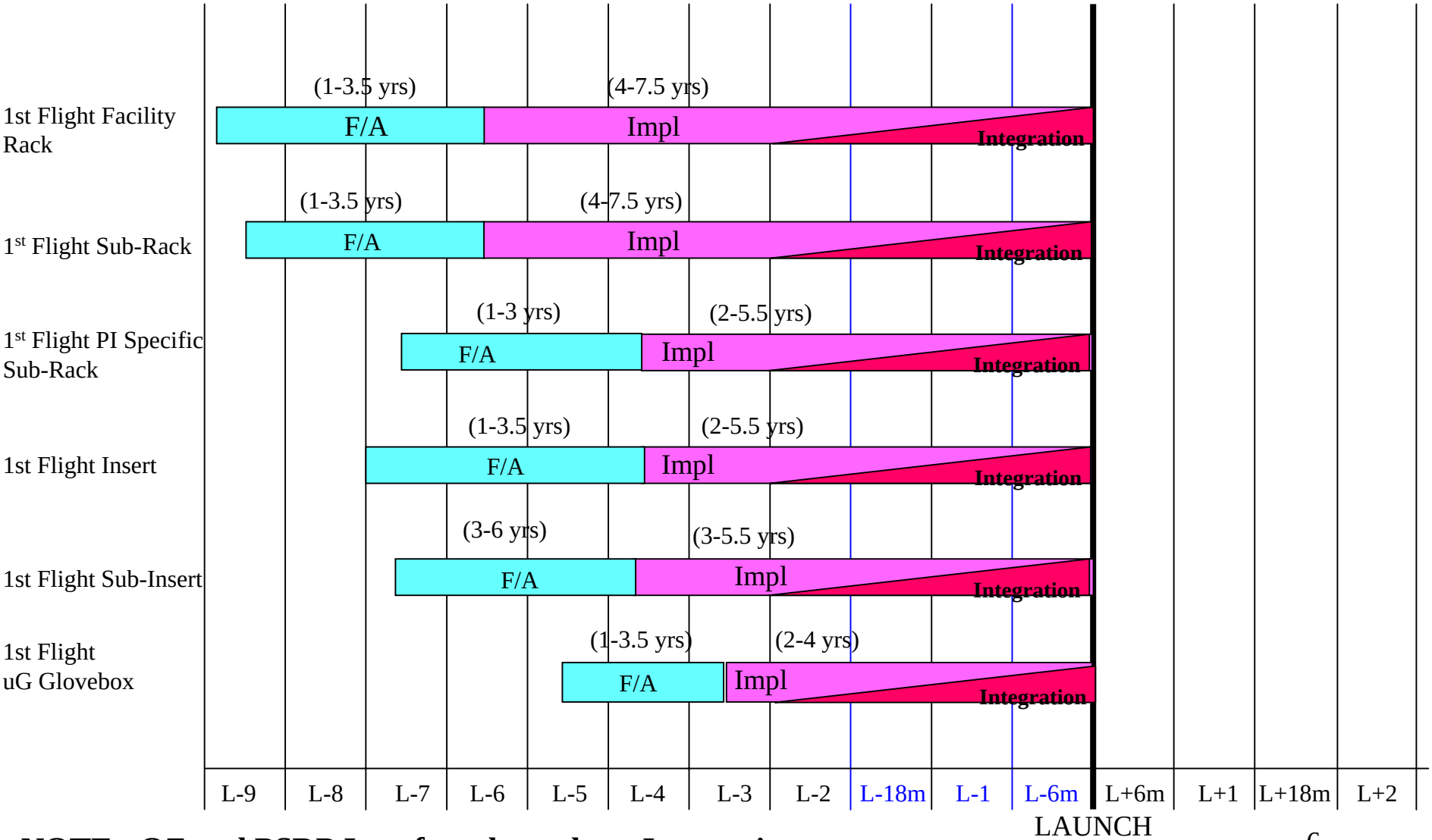

NOTE: OZ and PSRP Interface throughout Integration.

Generic End-to-End Cycle Time for Other Science and Commercial Payloads

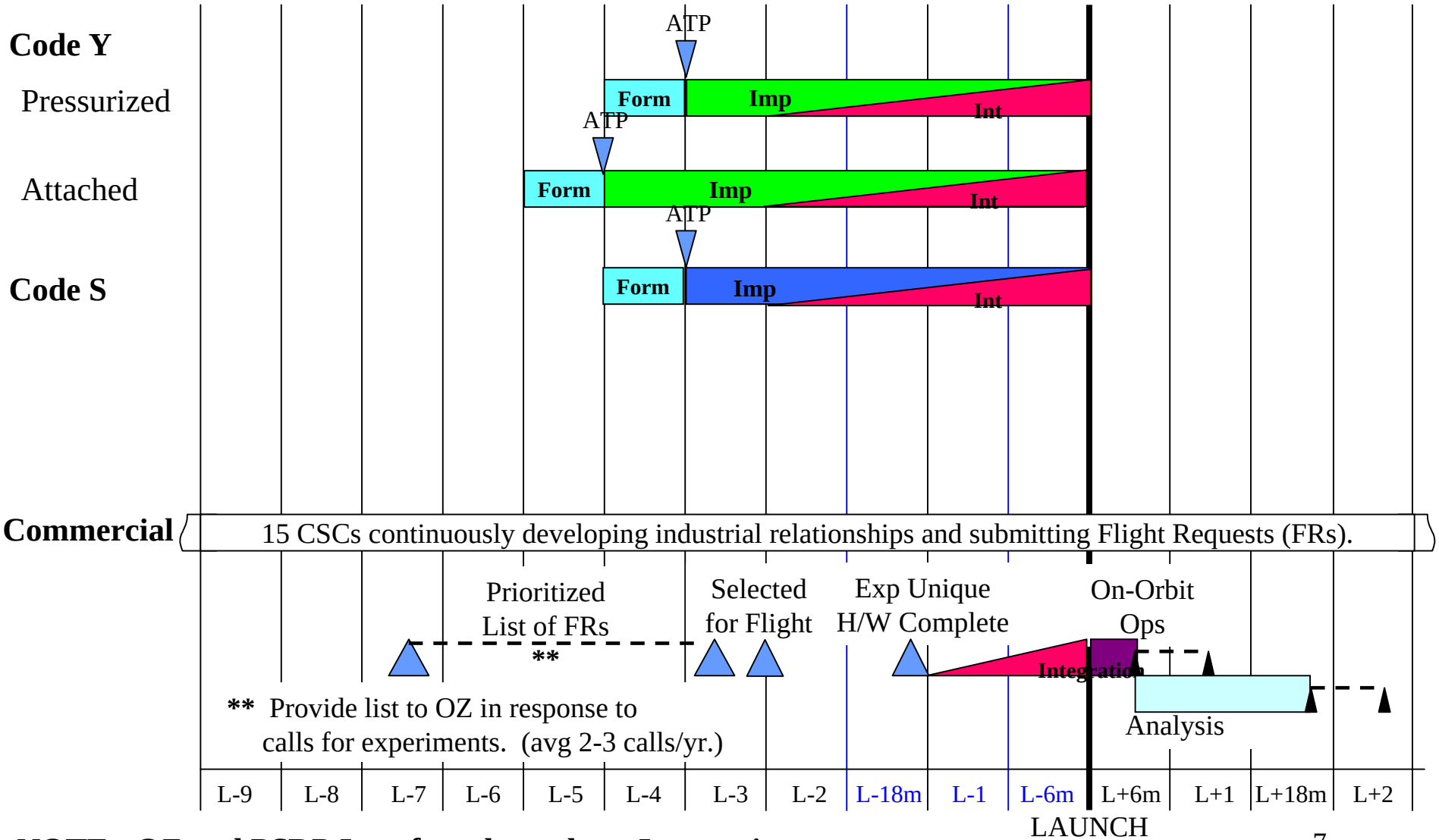

NOTE: OZ and PSRP Interface throughout Integration.

Payload End-to-End Cycle Drivers

- Improve budget certainty/confidence over life of the research project/process
- Improve predictability of access to space
- Reduce the time between selection and flight
- Increase resources available for science/technology/commercial utilization
- Reduce the process dwell time.

Backup Material

End-to-End Cycle Time for Scientific Hardware (SSBRP Facility)

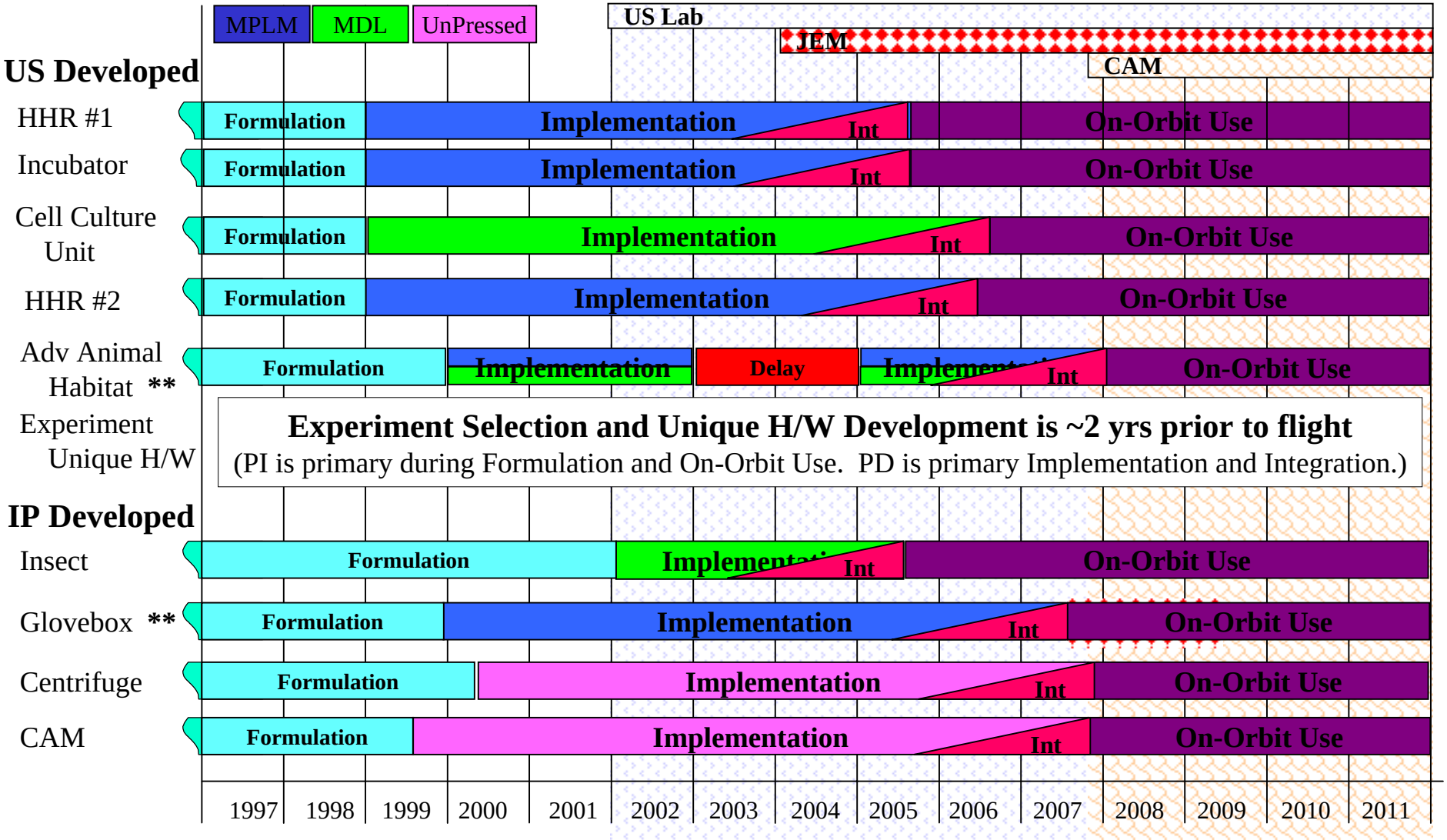

NOTE: Implementation starts at PDR. OZ and PSRP Interface throughout Implementation.

** Planned Refurbishment every two years.

End-to-End Cycle Time for Payload Classes

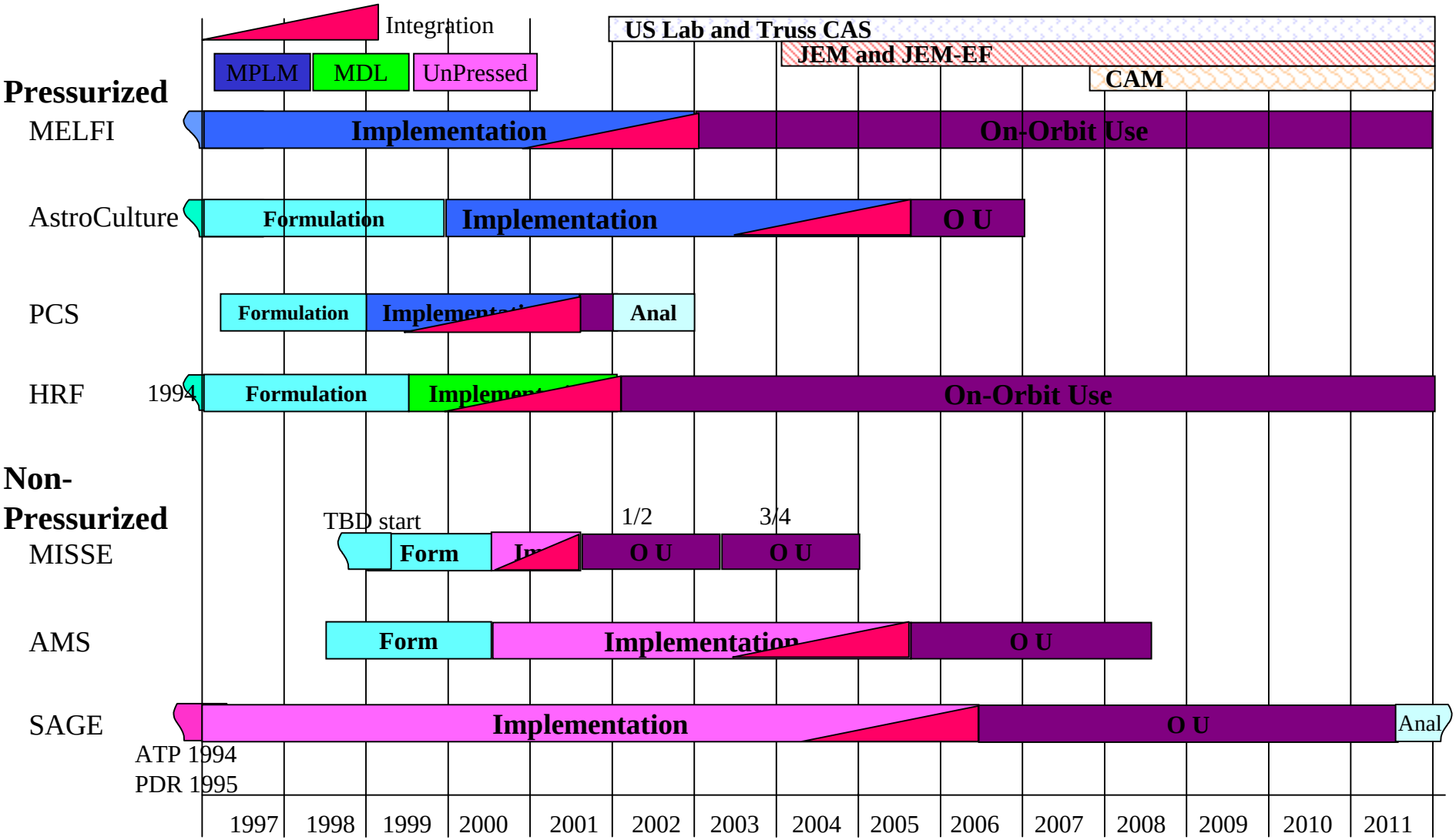

NOTE: Implementation starts at PDR. OZ and PSRP Interface throughout Implementation